CCSI

Carbon Capture Simulation Initiative

Optimization Under Uncertainty with Rigorous Process Models

John C. Eslick[1,2], Charles Tong[3], Brenda Ng[3], Andrew Lee[1,2], Alexander W. Dowling[1], David S. Mebane[4], Yang Chen[2] and David C. Miller[2]

(1) Carnegie Mellon University, (2) National Energy Technology Laboratory, (3) Lawrence Livermore National Laboratory, (4) West Virginia University

2015 AIChE Annual Meeting

9 November 2015

Outline

- Motivation/Process Model – Solid Sorbent Bubbling Fluidized Bed (BFB) Reactor CO_2 Capture System
- Simulation Based Optimization Under Uncertainty (OUU)
- Framework for Optimization and Quantification of Uncertainty and Surrogates
- Case Study with BFB System
  - Deterministic Optimization
  - Uncertainty Quantification
  - Optimization Under Uncertainty (OUU)
- Conclusions

Bubbling Fluidized Bed CO_2 Capture System Model

Motivation: Need to optimize a process, where there is significant uncertainty in model parameters

- Optimization
  - Deterministic, use expected parameter value
  - Stochastic, use parameter probability distributions
- Complex process model
  - 120,000 variables
  - 120,000 equations
  - Want to work directly with process simulator
  - Simulator cannot handle stochastic optimization
  - Difficult to formulate and solve with traditional mathematical programming techniques
- Process model implemented in Aspen Custom Modeler (ACM)
- **Cost of Electricity (COE)** as performance indicator

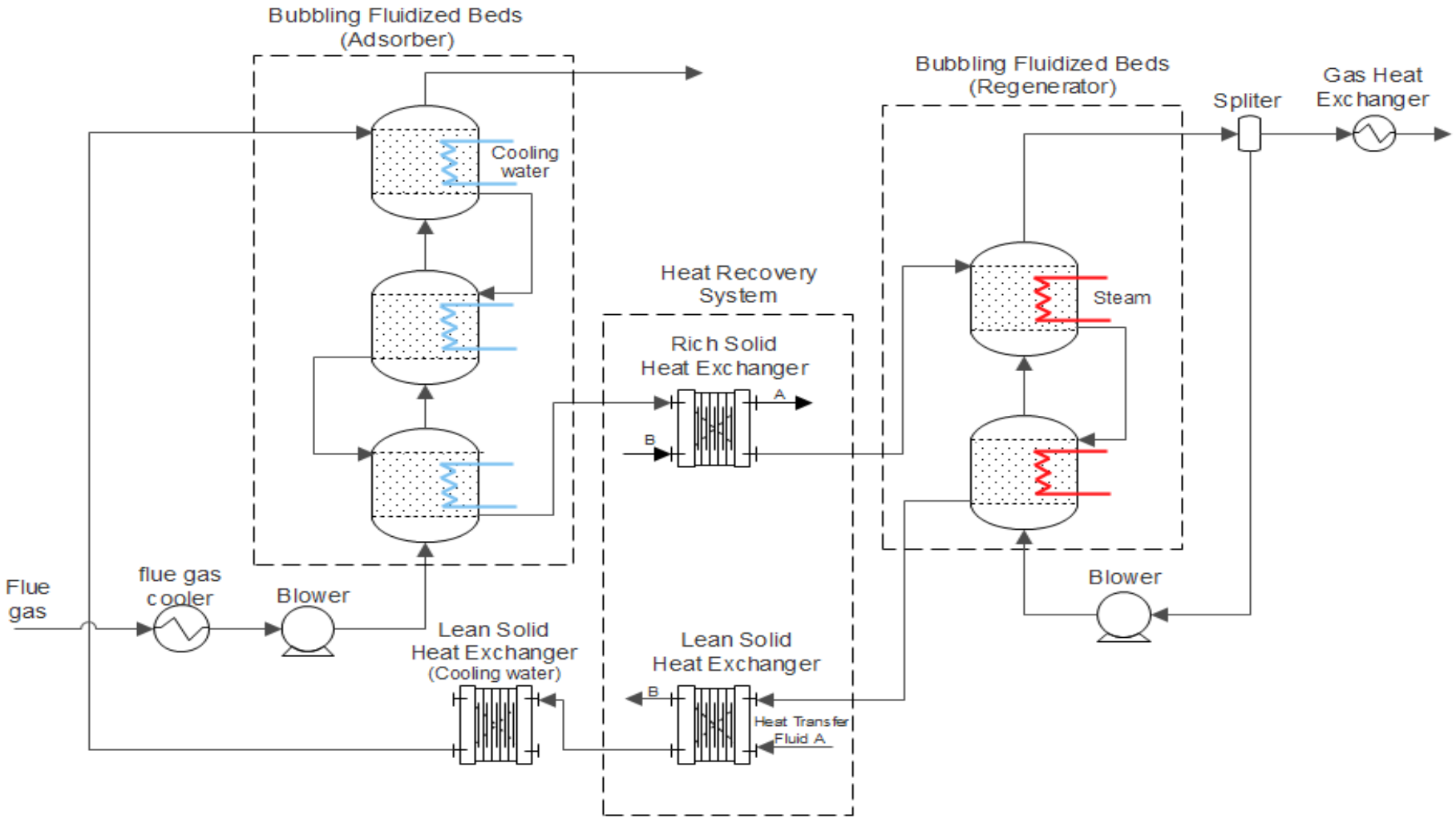

Optimization Under Uncertainty (OUU) – Two Stage Stochastic Problem

Goal: Design a robust process for a range of uncertain parameters to reduce risk

Stage 1: Design

Manipulate **Design Variables**

Objective: $\sum_i w_i \, c(\boldsymbol{d}, \boldsymbol{x}_i, \boldsymbol{\omega}_i)$

$i \in \text{scenarios}$

$\boldsymbol{d}$ = design variables

$\boldsymbol{x}_i$ = operating variables

$\boldsymbol{\omega}_i$ = uncertain parameters

w_i = scenario weight

c = cost of electricity

Solved in FOQUS with DFO

Stage 2: Recourse

Scenario 1

- Manipulate **Operating Variable**
- Objective: $c(\boldsymbol{d}, \boldsymbol{x}_1, \boldsymbol{\omega}_1)$
- Constraints applied here
- Solved in ACM (SQP)

⋮

Scenario i

⋮

Scenario N

Trivially Parallelizable

Optimization Under Uncertainty – Scenario Selection

- Goals of Scenario Selection
  - Accurately represent uncertain parameter distribution
  - Preserve correlations between parameters
  - Reduce the number of samples required
- Method
  1. Conduct sensitivity analysis
  2. Select parameter bins based on sensitivity (higher sensitivity parameters get more bins)
  3. Sample from the uncertain parameter multivariate distribution
  4. Place samples into bins
  5. Assign a scenario to all nonempty bins, and use median value of samples in that bin for scenario
  6. Weight scenario based on number of samples in bin

Framework for Optimization, Quantification of Uncertainty, and Surrogates

FOQUS

- Platform for Derivative Free Optimization (DFO) and Uncertainty Quantification
- Flowsheet of Process Models
- Graphical Interface

Turbine

- Job Queueing System
- Cluster/Cloud/Workstation
- Parallel execution of Simulations
- Parallel execution of FOQUS

Critical for UQ and OUU where a very large number of number of simulations is required

Process Simulation

- Aspen Plus
- Aspen Custom Modeler (ACM)
- gPROMS
- Excel

SimSinter

- Standard interface for process simulators
- .NET
- Graphical configuration tool

Deterministic BFB Model Optimization

- **Objective: minimize the cost of electricity (COE)**
- **Two types of decision variables**
  - Design variables cannot be changed in response to uncertainty:
    - Adsorber/regenerator diameters and bed depths
    - Adsorber/regenerator heat exchange tube diameters/spacing
    - Areas of heat exchangers
  - Operating variables can be changed in response to uncertainty
    - Sorbent Flow
    - Flow rates
    - Temperatures
- **Constraints:**
  - Capture at least 90% of CO_2 generated
  - No slug flow in BFB
  - Limit on steam extraction from power plant
  - Recycle greater than minimum fluidization velocity in regenerator
- **Uncertain Parameters**
  - Set to expected values (deterministic problem)
- **Optimized in ACM**
  - Starting point for UQ and OUU

Decision Variables – Design (Stage 1)

6 Adsorber Trains
4 Regenerator Trains

Abs. Top Bed Depth (m)
L.B. = 0.75
U.B. = 2.00
Opt = 1.058

Abs. Diameter (m)
L.B. = 10.0
U.B. = 15.0
Opt = 12.75

Abs. HX Tube Diameter (m)
L.B. = 0.0127
U.B. = 0.075
Opt = 0.471

Abs. Mid Bed Depth (m)
L.B. = 0.75
U.B. = 2.00
Opt = 1.223

Abs. Bot. Bed Depth (m)
L.B. = 0.75
U.B. = 2.00
Opt = 0.75

Flue Gas Cooler Area (m^2)
L.B. = 10,000
U.B. = 17,000
Opt = 15,651

Rich Side Area (m^2)
L.B. = 60,000
U.B. = 140,000
Opt = 81,676

Rgn. Diameter (m)
L.B. = 8.0
U.B. = 12.0
Opt = 9.649

Rgn. Top Bed Depth (m)
L.B. = 2.0
U.B. = 6.0
Opt = 3.572

Rgn. Bot. Bed Depth (m)
L.B. = 2.0
U.B. = 9.0
Opt = 4.947

Lean Side Area (m^2)
L.B. = 60,000
U.B. = 140,000
Opt = 79,270

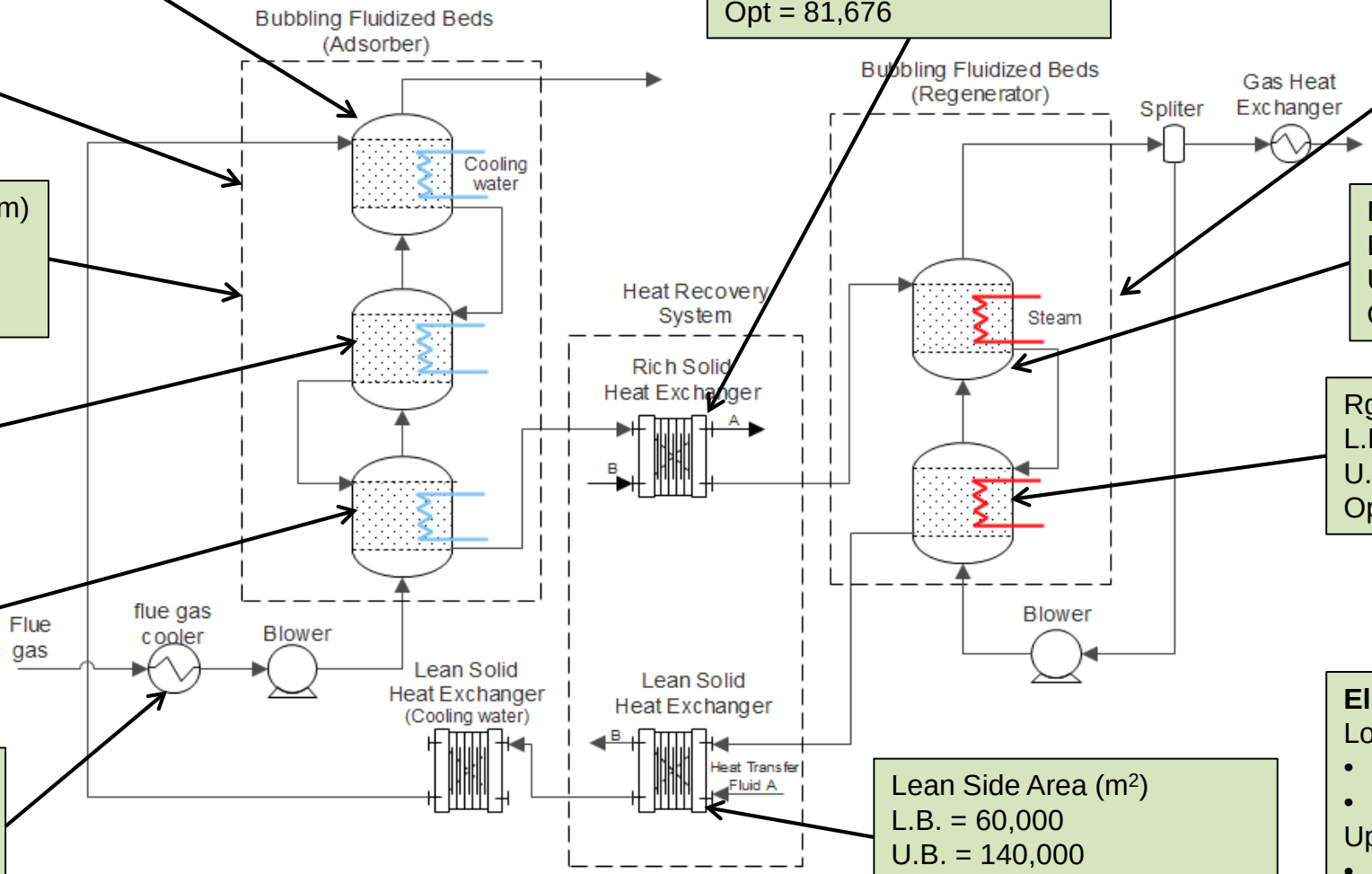

Eliminated, always on bound:
Lower:
- Adsorber HX tube spacing
- Regenerator HX tube spacing

Upper:
- Regenerator HX tube diameter

Decision Variables – Operating (Stage 2)

6 Adsorber Trains
4 Regenerator Trains

Solids Circulation (kg/hr)
Total (All trains)
L.B. = 4,500,000
U.B. = 12,000,000
Opt = 7,413,651

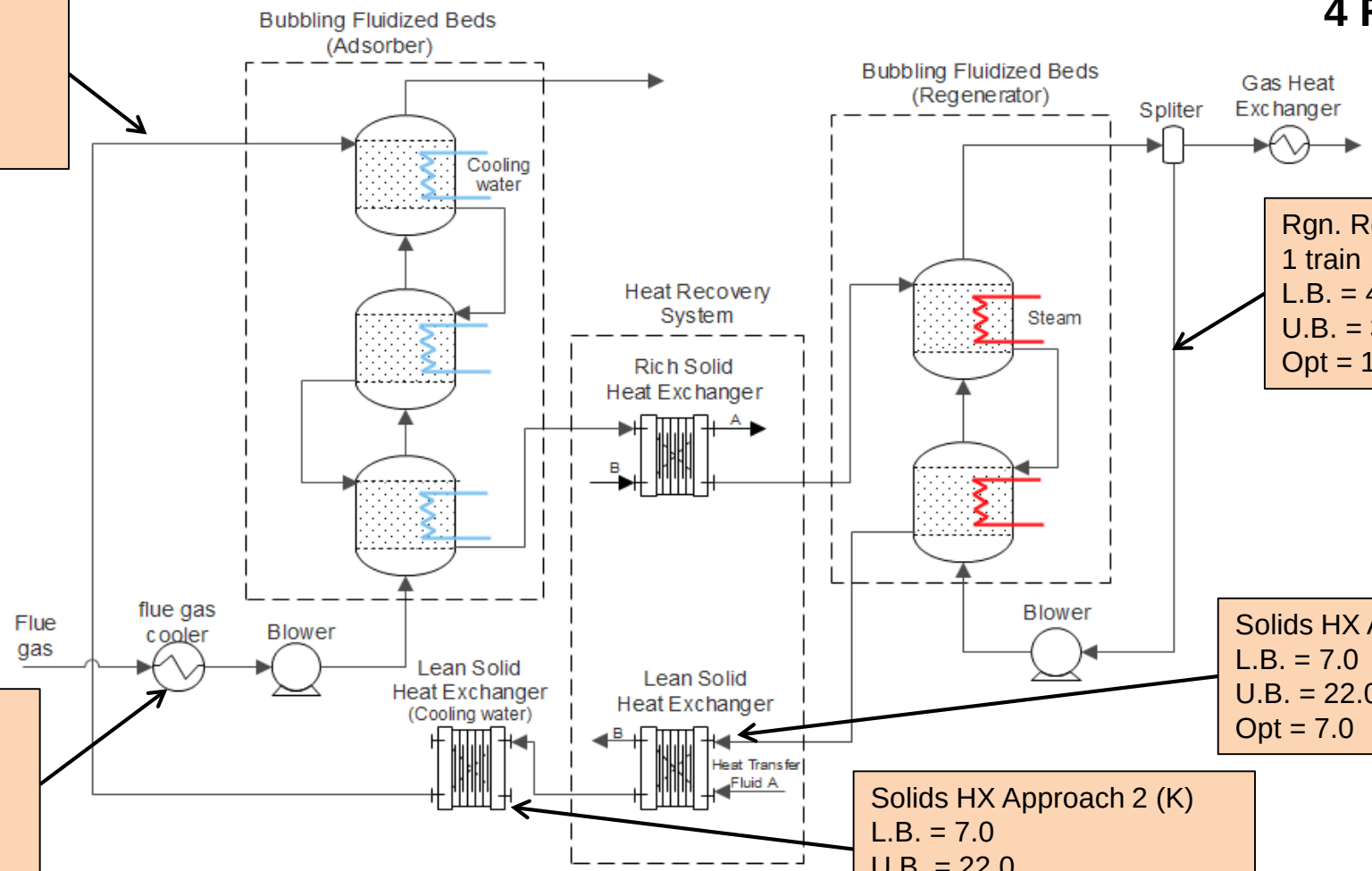

Rgn. Recycle (kmol/hr)
1 train
L.B. = 400
U.B. = 3,000
Opt = 1,284

Solids HX Approach 1 (K)
L.B. = 7.0
U.B. = 22.0
Opt = 7.0

Flue Gas Cooling Water
(kmol/hr), 1 train
L.B. = 100,000
U.B. = 180,000
Opt = 133,984

Solids HX Approach 2 (K)
L.B. = 7.0
U.B. = 22.0
Opt = 7.99

Case Study – Heat Transfer

- Objective, variables, and constraints are the same as the deterministic problem
- Uncertain Parameters: Overall heat transfer coefficients
- Error estimated error to be +/- 26%, based on literature
- Assumed adsorber and regenerator heat transfer coefficient are independent
- 9 scenarios
- Uniform probability

Case Study Heat Transfer — COE Results

Scenarios and Weights

	Adsorber Heat Transfer (% deviation)			
Regenerator Heat Transfer (% deviation)		-26	0	+26
	-26	1/9	1/9	1/9
	0	1/9	1/9	1/9
	+26	1/9	1/9	1/9

Difference in COE from deterministic optimal solution $/MWhr		
	Deterministic Design	Stochastic Design
Worst Scenario	1.54	1.23
Nominal Scenario	0.00	0.04
Best Scenario	-0.53	-0.44

Significant Design Parameter Changed: Regenerator Diameter +0.35 m to provide 850 m^2 (7.5%) additional heat transfer surface area

Kinetic Parameter Distributions

- Solid Sorbent is mesoporous silica particle with polymer amine in pores
- Kinetic parameter probability distribution defined by 31,999 samples
  - Bayesian calibration and TGA data
  - Parameters are correlated
  - Bicarbonate reaction (2) was found insignificant
- Reduced to 284 scenarios for OUU

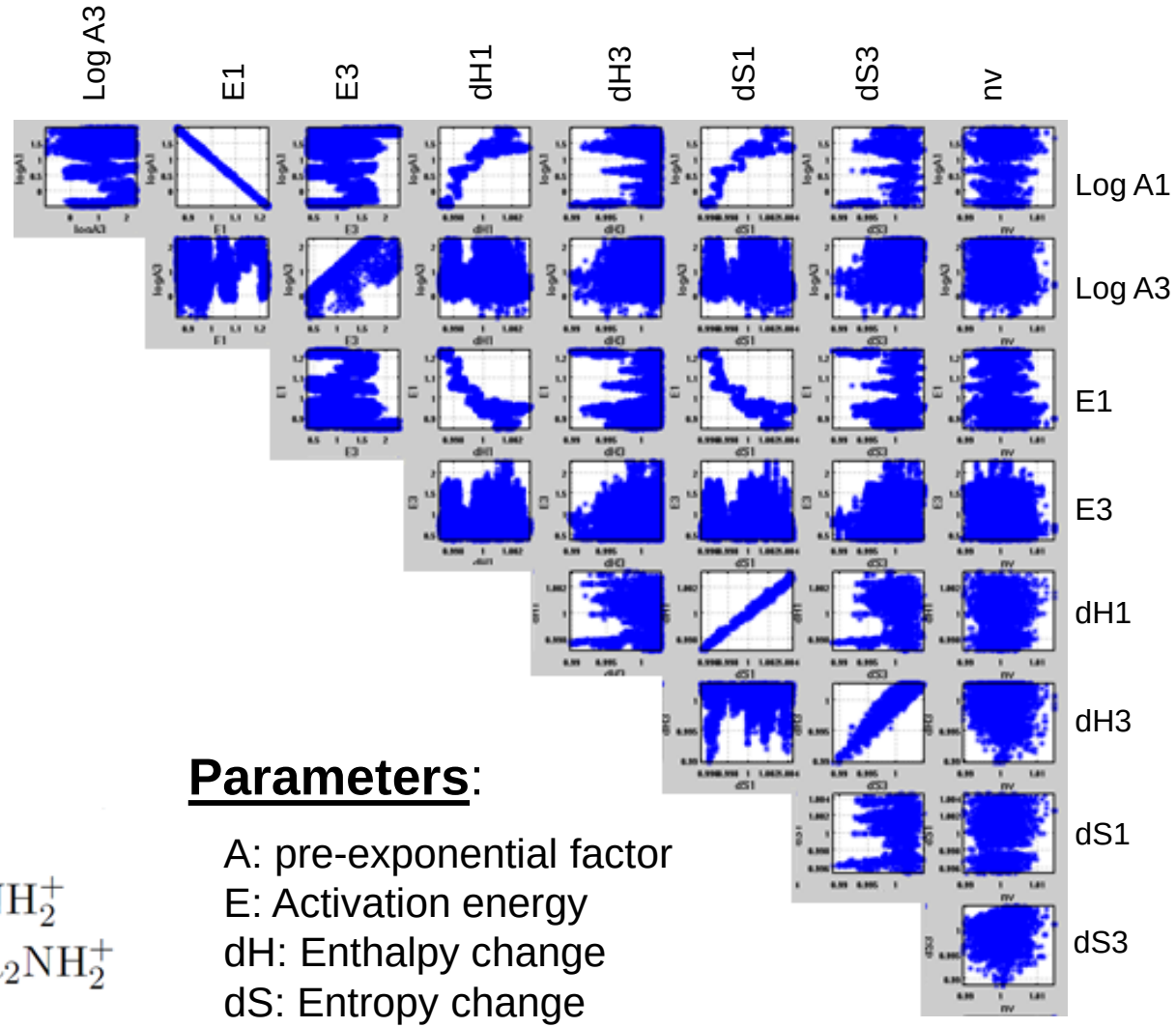

Rxn 1: $$H_2O(gas) \rightleftharpoons H_2O(phys)$$

Rxn 2: $$R_2NH + H_2O(phys) + CO_2(gas) \rightleftharpoons HCO_3^- + R_2NH_2^+$$

Rxn 3: $$2R_2NH + CO_2(gas) \rightleftharpoons R_2NCO_2^- + R_2NH_2^+$$

Parameters:

A: pre-exponential factor
E: Activation energy
dH: Enthalpy change
dS: Entropy change
nv: Active site density

OUU Kinetic Parameters – Preliminary Results

Difference in COE from deterministic optimal solution $/MWhr	
Deterministic Design	**Stochastic Design**
Scenarios With Largest COE	
65.83	62.12
9.68	8.39
4.44	3.99
1.80	1.63
1.42	1.30
0.50	0.44
Nominal Case	
0	0.03
Best Scenario	
-0.5	-0.5

Accomplishments/Future Work

- Accomplishments
  - Developed effective tools for working directly with process simulations
    - Derivative Free Optimization (DFO)
    - Uncertainty Quantification
    - Optimization Under Uncertainty
  - Demonstrated tools with a practical OUU case study
- Future Work
  - Improve the numerical reliability of the BFB process model
  - Complete a comprehensive case study including more sources of uncertainty
  - Quantify the value of optimization under uncertainty

Acknowledgements

- CCSI Technical Team
  - SorbentFit
    - Joel Kress (LANL)
  - Process Models
    - Solid sorbents: Debangsu Bhattacharyya, Srinivasarao Modekurti, Ben Omell (West Virginia University), Hosoo Kim, Juan Morinelly, Yang Chen (NETL)
  - FOQUS
    - ALAMO: Nick Sahinidis, Alison Cozad, Zach Wilson (CMU), David Miller (NETL)
    - Superstructure: Nick Sahinidis, Zhihong Yuan (CMU), David Miller (NETL)
    - DFO: Qianwen Gao (NETL)
    - UQ: Jeremey Ou (LLNL)
    - Turbine: Josh Boverhof, Abdelrahman Elbashandy, Deb Agarwal (LBNL)
    - SimSinter: Jim Leek (LLNL)

Disclaimer This presentation was prepared as an account of work sponsored by an agency of the United States Government. Neither the United States Government nor any agency thereof, nor any of their employees, makes any warranty, express or implied, or assumes any legal liability or responsibility for the accuracy, completeness, or usefulness of any information, apparatus, product, or process disclosed, or represents that its use would not infringe privately owned rights. Reference herein to any specific commercial product, process, or service by trade name, trademark, manufacturer, or otherwise does not necessarily constitute or imply its endorsement, recommendation, or favoring by the United States Government or any agency thereof. The views and opinions of authors expressed herein do not necessarily state or reflect those of the United States Government or any agency thereof.

Extra Slides
BFB Model

CCSI's Flexible Bubbling Fluidized Bed (BFB) Model

1-D, two-phase, pressure-driven and non-isothermal models

- Based on hydrodynamic correlations
- Supports complex reaction kinetics
- Compatible with CCSI UQ tools
- Implemented in both ACM and gPROMS

- Flexible configurations
  - Dynamic or steady-state
  - Adsorber or regenerator
  - Under/overflow
  - Integrated heat exchanger

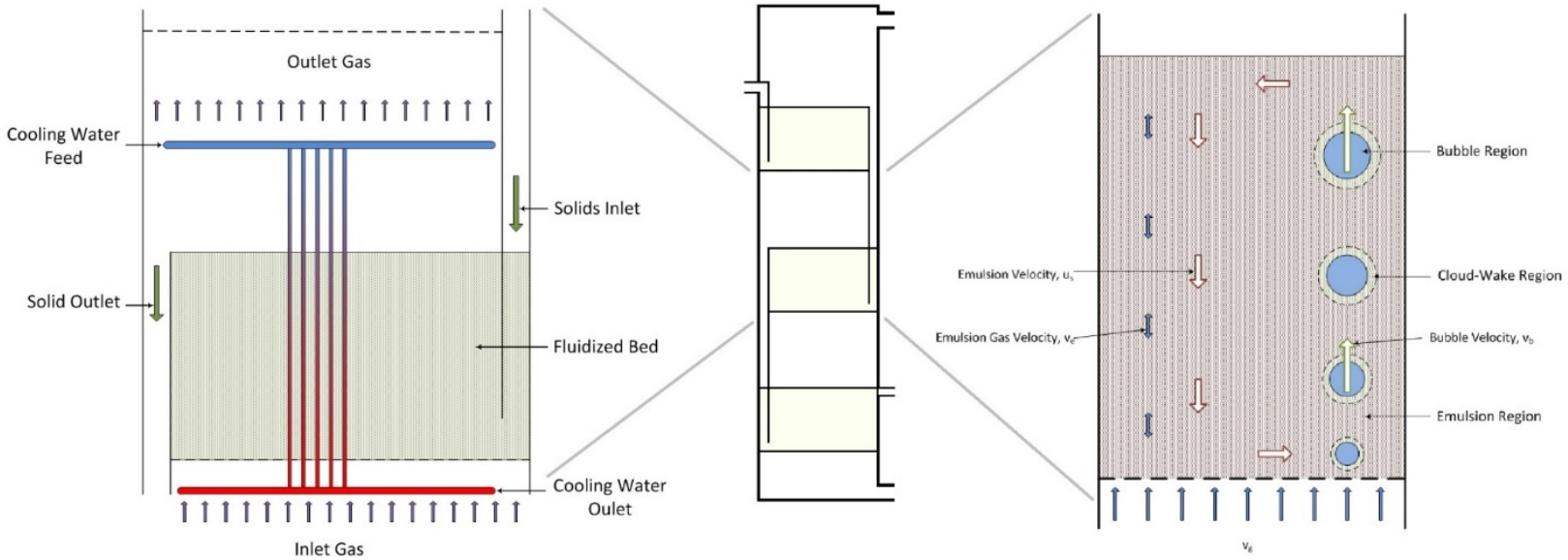

Lee, A. and Miller, D.C., *A One-Dimensional (1-D) Three Region Model for a Bubbling Fluidised-Bed Adsorber, I&ECR, 2013, 52(1), 469-484*

Extra Slides
FOQUS Structure

FOQUS (Framework for Optimization and Quantification of Uncertainty and Sensitivity

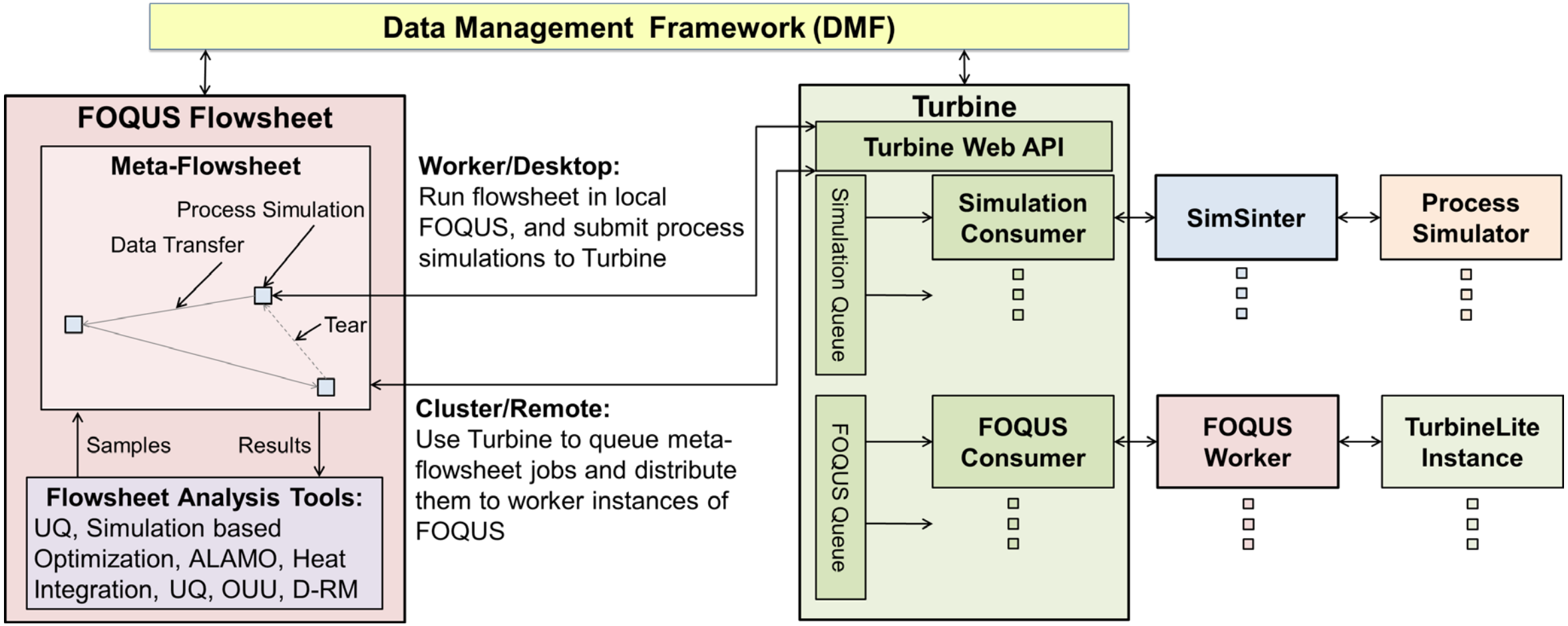

FOQUS Graphical Interface

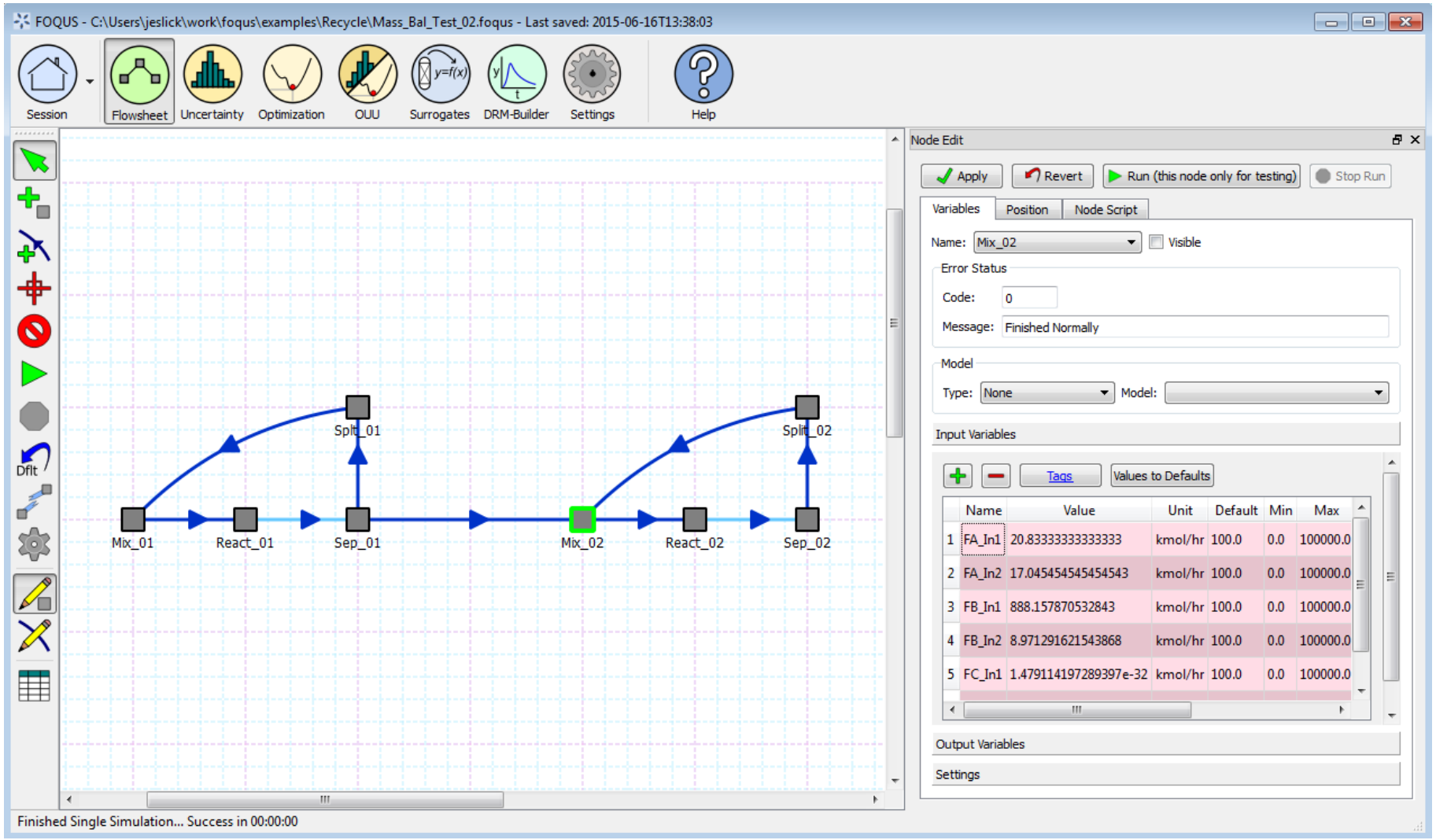

Extra Slides
Kinetic Parameter Case Study

Kinetic Parameter Distributions

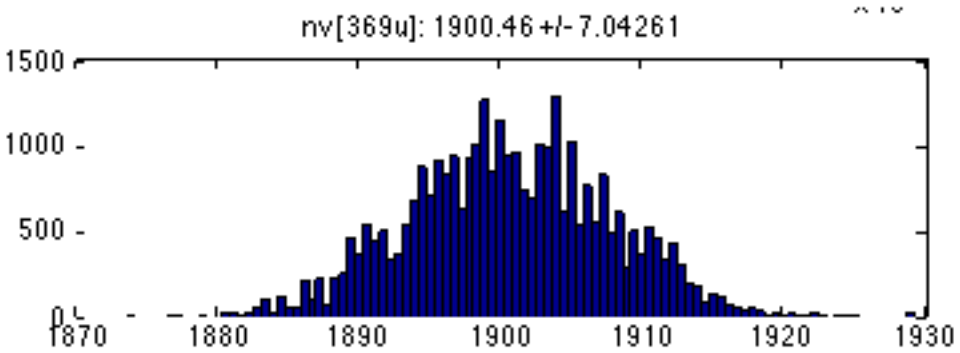

Kinetic Parameter Distributions

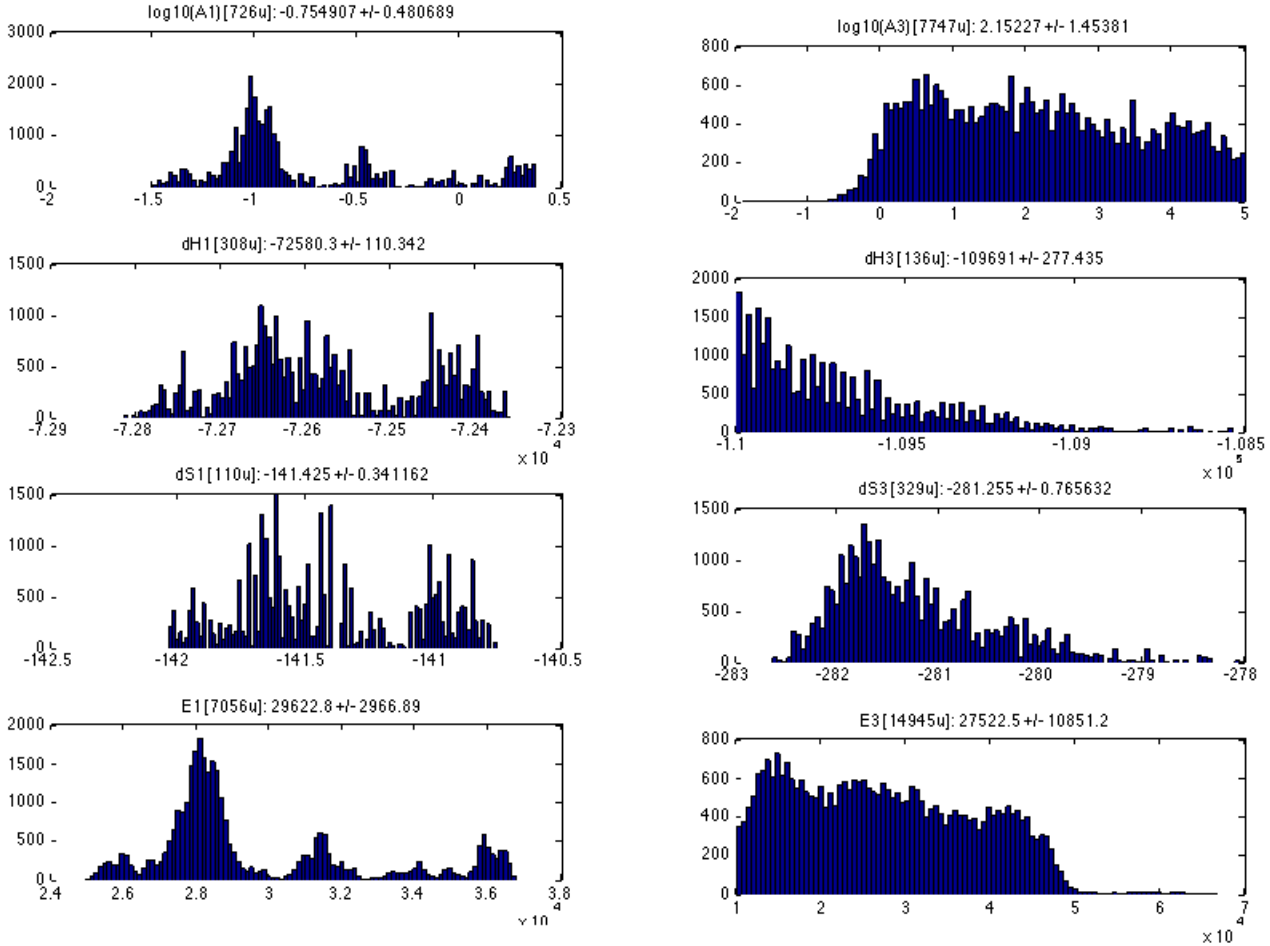

Uncertainty Quantification Results (UQ)

Design Variables (11): fixed at their deterministically optimal values

Operating Variables (5): Either fixed at deterministic optimum or optimized
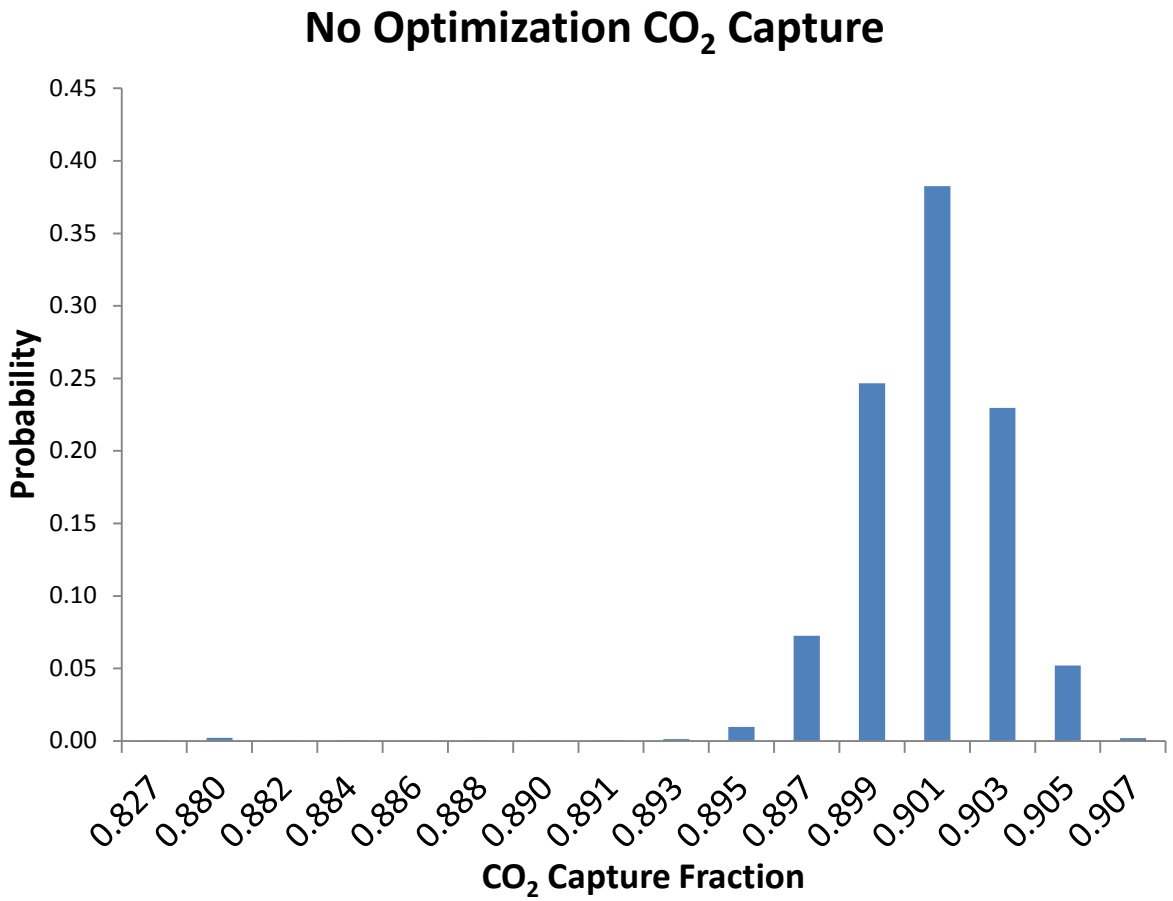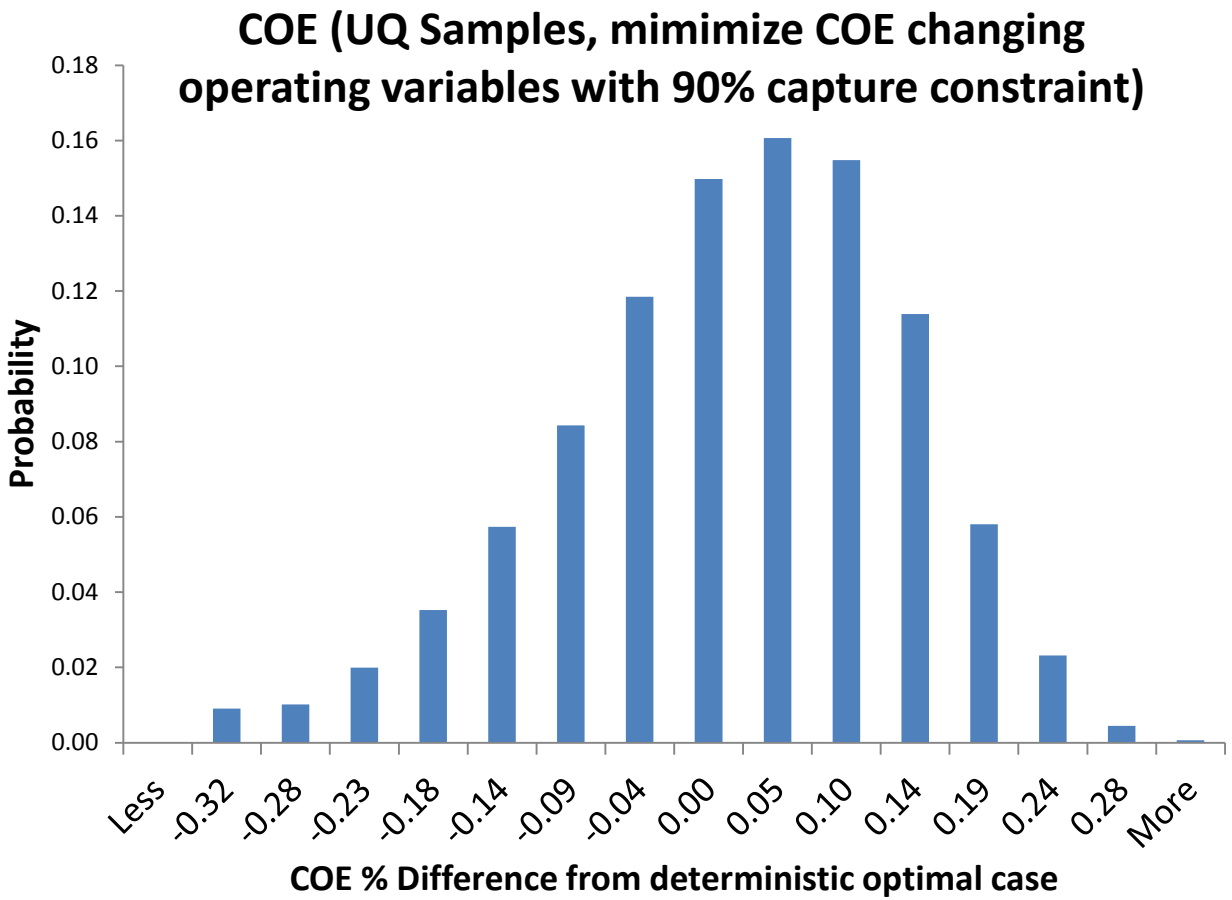
Uncertain Variables (9): kinetic parameters drawn from inferred distribution